EV9618-36

# 2CB-GW Filter Cartridge

## Delivers quality water for foodservice, vending and OCS applications

**2CB-GW Replacement Cartridge: EV9618-36**

## BENEFITS

Carbon block filter finely polishes water for high quality beverage and food applications

Reduces chlorine taste and odor and other offensive contaminants that can adversely affect the taste of water and beverages

Reduces fine dirt and particles

Does not remove flouride

Reduces limescale build-up that can cause excessive machine downtime and increased maintenance costs

Plus, scale reduction reduces energy costs

Sanitary cartridge replacement is simple, quick and clean. Internal filter parts are never exposed to handling or contamination

Specially designed for single cup machines

Fits all Everpure heads

## INSTALLATION TIPS

Never use saddle valve for connection

Use 3/8" water line

Install vertically with cartridge hanging down

Allow 2 1/2" clearance below the cartridge for easy cartridge replacement

Flush 2CB-GW cartridge by running water through the filter for 5 minutes at full flow

## OPERATION TIPS

Change filter cartridges on a regular 6 month preventative maintenance program

Service flow rate must not exceed 0.5 GPM

Always flush the filter cartridge at time of installation and cartridge change

## APPLICATION/SIZING

Ideal for problem water areas

For foodservice, vending machine, single cup coffee machines (POD) and office coffee service applications

Rated Capacity: 3000 gallons (11.355 L)

# 2CB-GW Filter Cartridge

## SPECIFICATIONS

Overall Dimensions:
10.25" H x 3.25" Diameter

Service Flow Rate:
0.5 GPM (1.9 Lpm)

Pressure Requirements:
10-125 psi(0.7-8.6 bar) non-shock

Rated Capacity:
3,000 gallons (11.355 L)

Maximum Temperature:
35 - 100ºF (2 - 38ºC)

No electrical connection required

The contaminants or other substances removed or reduced by this system are not necessarily in your water. Do not use with water that is microbiologically unsafe or of unknown quality without adequate disinfection before or after the system.

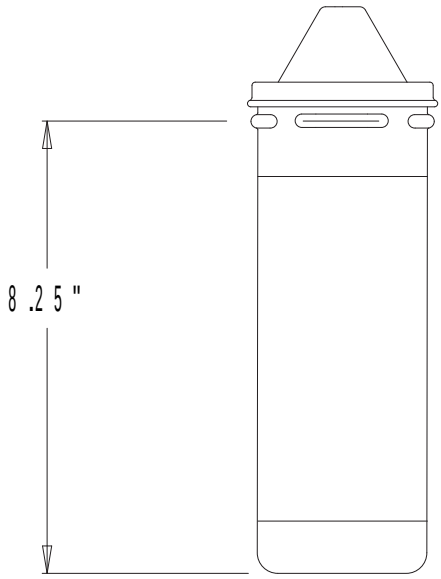


## WARRANTY

Everpure water treatment systems (excluding replaceable elements) are covered by a limited warranty against defects in material and workmanship for a period of five years after date of purchase. Everpure replaceable elements (filter cartridges and water treatment cartridges) are covered by a limited warranty against defects in material and workmanship for a period of one year after date of purchase. See printed warranty for details. Everpure will provide a copy of the warranty upon request.


EVERPURE®

EVERPURE, INC.
1040 Muirfield Drive
Hanover Park, Illinois 60133
Toll Free (800) 323-7873
Tel (630) 307-3000
Fax (630) 307-3030
http://www.everpure.com

*In Europe:*
N.V. EVERPURE (EUROPE) S.A.
Geldenaaksebaan 478
B-3001 Heverlee
Belgium
Tel 32-16-401191
FAX 32-16-402691

*In Japan:*
EVERPURE JAPAN, INC.
1-8-19, Tsumada Kita,
1-Chome, Atsugi City
Kanagawa Ken 243-0812
Japan
Tel 81-462-23-6563
FAX 81-462-21-6775

Everpure
1040 Muirfield Drive
Hanover Park, IL 60133
Phone: 630-307-3000 Fax: 630-307-3030